POLARIS

CHASSIS, MAIN FRAME AND SKID PLATES - Z26NEY99A4/B4/A6/B6 (C750901)

2026 RZR - RZR XP S 1000 ULTIMATE (R01) - Z26NEY99A4/B4/A6/B6

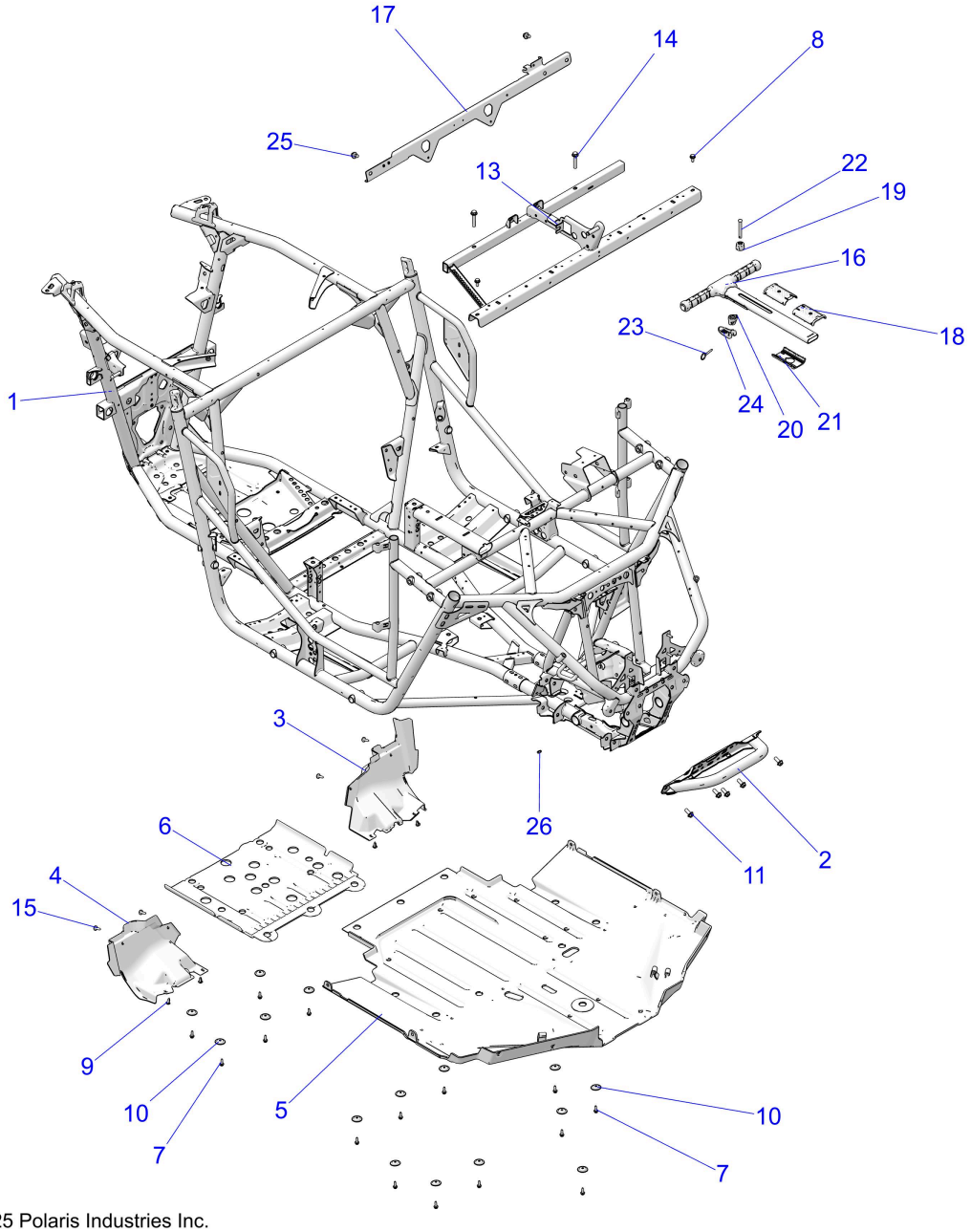

© 2025 Polaris Industries Inc.

C750901

Reference #	*Part#*	*Description*	*Quantity*
1	1028958-458	WELD-FRAME MAIN,72,BLK	1
2	1028894-831	WELD-FRT,BUMPER,SHDW BRONZE	1
3	5457593-070	COVER-SCM,LH,BLK	1
4	5457594-070	COVER-TANK,RH,BLK	1
5	5466370-070	SKID PLATE-FRONT,BLK	1
6	5466296-070	PLATE-SKID,REAR	1
7	7518529	SCR-M6X1.0X20,HXHD,FLG,TDFM,BK	15
8	7518555	SCR-TFHFL-M8X1.25X20 CHS ZOD	2
9	7661855	RIVET-TUFLOK,.315-.325X.787	4
10	7556065	WASHER-SKID PLATE	13

11	7519071	SCR-M10X1.5X25 8.8 HXFL ZOD	4
13	1026956-329	WELD-SEAT BASE,FRT,BLK	1
14	7518474	SCR-HXFL-M10X1.5X55 8.8 ZY3	2
15	7519650	SCR-TXTH-M6X1.0X25 ZFB	4
16	2637771	ASM-GRAB BAR	1
17	5274852-329	BRKT-CLOSE OFF SUPPORT,ECOAT	1
18	5457427	BUSHING-GRAB BAR,UPPER	2
19	5457511	NUT-GRAB BAR	1
20	5457512	CAP,GRAB BAR LEVER	1
21	5457891	BUSHING-GRAB BAR,LOWER	2
22	7521309	ROD-GRAB BAR THREADED	1
23	7663047	PIN-GRAB BAR	1
24	5459039	LEVER,GRAB BAR	1
25	7520200	SCR-HXFL-M10X1.25X16 8.8 ZY3	2
26	7547307	NUT-WELD,M6X1,PROJECTION	1

Copyright 1996-2026 Polaris Industries U.S.A All rights reserved.